ISSN 2395-1621

# Fem Analysis of Deep Groove Ball Bearings with Various Defects

#1Pravin Z. Lokhande, #2Kashinath H. #3Munde, Ganesh E.

[1]pravin.lokhande20121990@gmail.com
[2] kashinathmunde@gmail.com
[3]ganeshkondhalkar@gmail.com

Mechanical Department, Savitribai Phule Pune University,
ABMSP's Anantrao Pawar College of Engineering and Research, Parvati, Pune 09
Mechanical Department, Savitribai Phule Pune University,
Dr. D.Y. Patil School of Engineering, Pune, India

**ABSTRACT**

**In this stage, a method based on the finite element vibration analysis is presented for defect detection in rolling element bearings with single or multiple defects on different components of the bearing structure using the time and frequency domain parameters. Theoretical frequencies of inner race and outer race for the defective ball bearings are being measured by FFT analyzer. A dynamic loading model is proposed in order to create the nodal excitation functions used in the finite element vibration analysis as external loading. By using hyper meshing & ABAQUS software we are going to make the model. The experimental results and results obtained from the ABAQUS we are going to tally.**

**Keywords— ball bearing, race defect, defect frequencies, vibration spectrum, amplitudes, time domain, FFT analyser, local defect**

ARTICLE INFO

**Article History**

Received :18th November 2015

Received in revised form :

19th November 2015

Accepted : 21st November , 2015

**Published online :**

**22nd November 2015**

## I. INTRODUCTION

Bearing is crucial part of any rotary components and its failure causes disastrous failure of machinery. Vibration signature analysis is one of the most effective tools for monitoring the condition of ball bearings. Best method to study the failure analysis of ball bearing is by creation of artificial cracks of different sizes on various elements and noting down its signatures. It takes long time for life test where healthy bearings are rotated till initialization of crack. From the literature survey, it is observed that most of the work was carried out at one particular speed up to 1500 rpm. Therefore, author finds a scope for faulty bearing operation and measurement of amplitude of vibrations at different speeds from 1000 to 5000 rpm, different loads up to 200N and at various defect sizes ranging from 250 micron to 2000 micron on bearing races. Therefore, author finds a scope for faulty bearing operation and measurement of amplitude of vibrations at different speeds. The model has been developed as spring mass system by assuming races as masses and balls as spring. The work has been extended with Finite Element Analysis of bearing with artificial defects to study the peaks at its outer ring as well as inner ring defect frequencies. The actual measurements of

© 2015, IERJ All Rights Reserved 

vibration amplitudes of bearings with artificial local defects have been carried out for verification of the numerical results. It is noted that the numerical results show good agreement with the experimental results. Support bearings are standard during the entire experimentation.

A dynamic loading model is proposed in order to create the nodal excitation functions used in the finite element vibration analysis as external loading. A computer code written in Visual Basic programming language with a graphical user interface is developed to create the nodal excitations for different cases including the outer ring, inner ring or rolling element defects. Forced vibration analysis of a bearing structure is performed using the commercial finite element package IDEAS under the action of an unbalanced force transferred to the structure via a ball bearing. Time and frequency domain parameters such as rms, crest factor, kurtosis and band energy ratio for the frequency spectrum of the enveloped signals are used to analyze the effect of the defect location and the number of defects on the time and frequency domain parameters. The role of the receiving point for vibration measurements is also investigated. The vibration data for various defect cases including the housing structure effect can be obtained using the finite element vibration analysis in order to develop an optimum monitoring method in condition monitoring studies.

## II. Problem Statement

The rolling elements bearings are widely used in industrial and domestic machines. The existence of even tiny defects on the mating surfaces of the bearing components can lead to failure through passage of time. Their failure leads to economical losses. The vibration monitoring technique is mostly used in the industries for health monitoring of bearings. Significant studies are available in open literature for vibration analysis of healthy and defective rolling elements bearings. Various researchers have studied the vibrations generated by bearings through theoretical model and experimentations. The researchers have developed the dynamic model of shaft bearing systems for the theoretical studies.

This paper reviews different dynamic models for rolling bearing in presence and absence of local and distributed defects. Moreover, the techniques used for the improvement of fault detection have also been summarized. The signal processing techniques like wavelet transform, high frequency resonance technique (HFRT), envelope analysis and cyclic autocorrelation have improved the fault detection. The defects in the rolling element bearings may arise mainly due to following reasons such as; improper design of the bearing improper manufacturing or mounting, misalignment of bearing races, unequal diameter of rolling elements, improper lubrication, overloading, fatigue, uneven wear etc. The rolling element bearing defects/faults classified into two categories; distributed defects and localized defects.

## III. Radial Deflection

Fig. 1 shows the schematic diagram to determine the radial deflection. x and y are the deflections along X and Y axis and $C_r$ is the internal radial clearance.

$$F = K\delta_r^n \quad \text{(I)}$$

Where,

F is the contact force, K the load–deflection coefficient for Hertzian contact elastic deformation, $\delta_r$ the radial deflection or contact deformation and n the load–deflection exponent; n is 3/2 for ball bearings and 10/9 for roller bearings.

The radial deflection at the ith ball, at any angle θ is given by:

$$\delta_r = (X\cos\theta i + Y\sin\theta i) - C_r \quad \text{(II)}$$

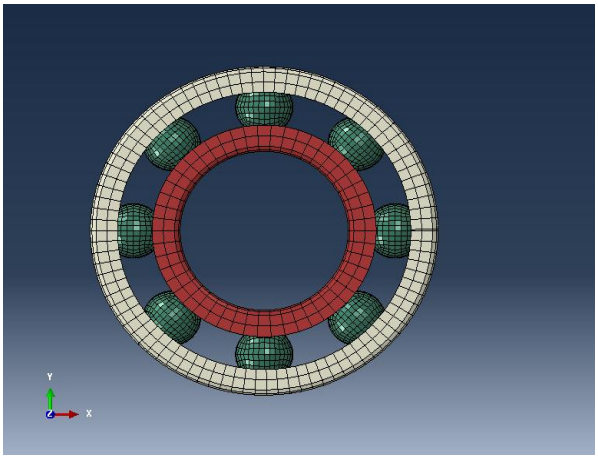

Fig1. Schematic diagram of a ball bearing

### Calculating the contact force

By Substituting Eq.(I) into Eq.(II), the contact force is:

$$F = K[(X\cos\theta i + Y\sin\theta i) - C_r]^{3/2} \quad \text{(III)}$$

The springs are required to act only in compression [III]. In other words, the term in the bracket in Eq. (III) should be positive; otherwise the ball and race are separated and the resulting force is set to zero. The total restoring force is the sum of the restoring forces of each rolling elements. In X and Y directions we have:

$$F_x = \sum_{i=1}^{z} K[(X\cos\theta i + Y\sin\theta i) - C_r]^{3/2} \cos\theta_i \quad \text{(IV)}$$

$$F_y = \sum_{i=1}^{z} K[(X\cos\theta i + Y\sin\theta i) - C_r]^{3/2} \sin\theta_i \quad \text{(V)}$$

## IV. Equation of Motion

The equations of motion for two degrees of freedom system can be written as follows:

$$M\ddot{x} + C\dot{x} + F_x = W \quad \text{(VI)}$$

$$M\ddot{y} + C\dot{y} + F_y = 0 \quad \text{(VII)}$$

Where M is the mass of rotor, c is the damping factor and W the radial load. $F_x$ and $F_y$ are the total Restoring forces in X and Y directions, respectively. Equations (VI) and (VII) are

© 2015, IERJ All Rights Reserved 

the second order non-linear differential equations. The solutions to these equations are derived by converting these into two first order differential equations using state space variable method [III].

V Defects

Due to rotation of bearings day by day it will undergo defects. There are mainly toe types of defects as follows:-

Localized defects

Surface defects

Distributed Defects

Distributed defects are mainly caused by manufacturing error, inadequate installation or mounting and abrasive wear. Distributed defects include surface roughness, waviness, misaligned races and unequal diameter of rolling elements. The change in contact force between roiling elements and raceways due to distributed defects cause an increased in the vibration level. Hence, the study of vibrations generated by distributed defects is mainly for quality inspection of bearings as well as for condition monitoring.

Localized Defects

These defects include cracks, pits and spalls on rolling surfaces caused by fatigue. The common failure mechanism is the crack of the races or rolling elements, mainly caused when a crack due to fatigue originated below the metal surface and propagated towards the surface until a metal piece is detached causing a small defect or spall. This defect accelerate when the bearing is overloaded or subjected to shock (impact) loads during their functioning and also increase with the rotational speed. Spalling can occur on the inner ring, outer ring, or rolling elements.

(a) **FTF** - Fundamental Train Frequency (frequency of the defected cage):

$$\mathbf{f\ (Hz)} = \frac{1}{2}\,\mathbf{S}\left[1 - \left(\frac{BD}{PD}\cos\beta\right)\right]$$

(b) **BPFI** - Ball Pass Frequency of the Inner race (frequency produce when the rolling elements roll across the defect of inner race):

$$\mathbf{f\ (Hz)} = \frac{n}{2}\,\mathbf{S}\left[1 + \left(\frac{BD}{PD}\cos\beta\right)\right]$$

(c) **BPFO** – Ball Pass Frequency of Outer race (frequency produce when the rolling elements roll across the defect of outer race):

$$\mathbf{f\ (Hz)} = \frac{n}{2}\,\mathbf{S}\left[1 - \left(\frac{BD}{PD}\cos\beta\right)\right]$$

(d) **BSF** – Ball Spin Frequency (circular frequency of each rolling element as it spins):

$$\mathbf{f\ (Hz)} = \frac{PD}{2BD}\,\mathbf{S}\left[1 - \left(\frac{BD}{PD}\cos\beta\right)^2\right]$$

**(e) Rolling Element Defect Frequency** or 2 x BSF:

$$\mathbf{f\ (Hz)} = \frac{PD}{BD}\,\mathbf{S}\left[1 - \left(\frac{BD}{PD}\cos\beta\right)^2\right]$$

Where,

S= Speed (revolutions per second)
n= No. of rolling elements
β= contact angle (degrees)
BD=ball or roller diameter
PD=pitch diameter

The total number of bearings which are having defects of various types is nine i.e. my analysis of defective bearing is concerned with total nine types of defective bearings. The detailed dimensions of bearing S.K.F. 6206 are as follows:-

Table no 1 Dimensions of bearing S.K.F. 6206

| **Parameter** | **Diameter Type** | **Dimensions (mm)** |
|---|---|---|
| Inner Race | Inner Diameter | 30 |
| Inner Race | Outer Diameter | 35.6 |
| Outer Race | Inner Diameter | 56.4 |
| Outer Race | Outer Diameter | 62 |
| Ball | Pitch Circle Diameter | 46 |
| Ball | Ball Diameter | 9.525 |

## V. FEM ANALYSIS

The various defects of deep groove ball bearings are valid through FEM analysis. FEM analysis is done with the help of Abaqus design software. Abaqus is a suite of powerful engineering simulation programs based on the finite element method, sold by dassault systems as part of their SIMULIA Product Life-cycle Management (PLM) software tools. The lectures in MANE 4240/CILV 4240 will cover the basics of linear finite element analysis with examples primarily from linear elasticity.

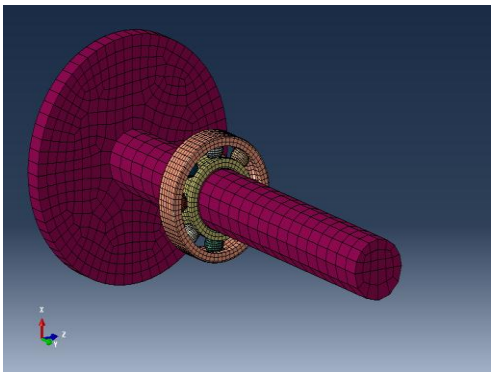

© 2015, IERJ All Rights Reserved 

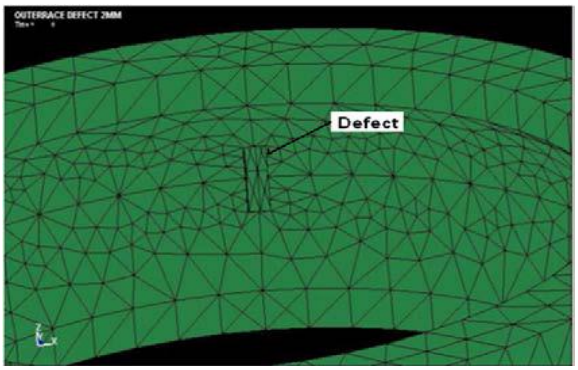


Fig no 2 a) Meshed model of bearing with outer ring defect b) Defect on outer ring of Bearing

ABAQUS is a highly sophisticated, general purpose finite element program, designed primarily to model the behavior of solids and structures under externally applied loading. ABAQUS includes the following features:

1. Capabilities for both static and dynamic problems
2. The ability to model very large shape changes in solids, in both two and three dimensions
3. A very extensive element library, including a full set of continuum elements, beam elements, shell and plate elements, among others.
4. A sophisticated capability to model contact between solids.
5. Capabilities to model a number of phenomena of interest including vibrations coupled fluid/structure interactions, buckling problems, and so on

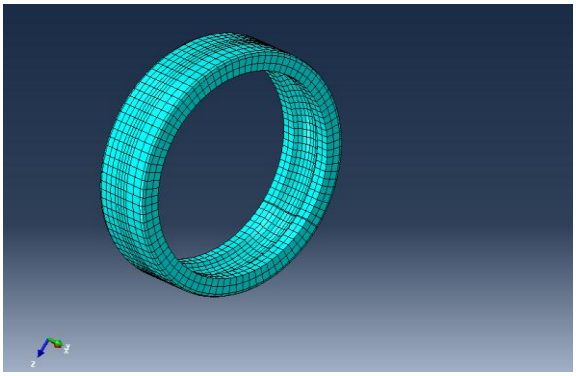

Fig no 2 (c) defective ball bearing races

The main strength of ABAQUS, however, is that it is based on a very sound theoretical framework. As a practicing engineer, you may be called upon to make crucial decisions based on the results of computer simulations. While no computer program can ever be guaranteed free of bugs. A complete Abaqus analysis usually consists of three distinct stages: preprocessing, simulation, and postprocessing. These three stages are linked together by files as shown below:

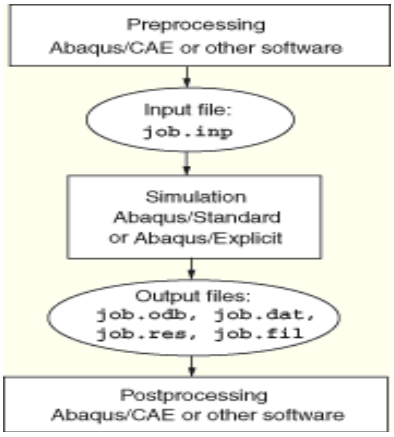


Fig 3. Schematic diagram of a ball bearing

## VI. EXPERIMENTAL APPORACH

The test rig has been developed for confirmation of the predicted results after referring the results obtained from the trial set-up. The developed test rig is as shown in Fig-3. Mounting table of size 100cm x 100cm with mass 800 kg approximately is designed and fabricated to reduce the shocks and vibrations produced due to electric motor and rotating components etc. A set up consists of 3HP/2880 rpm three-phase induction motor and output shaft which is mounted on table. Radial load is applied on test bearing by tension rod and measured by load cell. Test bearing is mounted in between two support bearing. The support bearings are healthy (Defect free) bearings and the test bearings are healthy as well as defective. Split type housing is designed for mounting and dismounting ease of test bearing. A special purpose bearing DFM 85 supplied by DJR Deluxe Bearings Ltd, Pune is used as test bearing which is single row deep groove ball bearing with contact angle zero and normally used in four wheeler engines. A piezo-electric accelerometer of capacity 10 kHz with magnetic base is mounted on the housing of the test bearing. The accelerometer is connected to OROS made 4 channels FFT Analyzer which processes the time signals. The output of analyzer is connected to computer which has the relevant hardware and the software to acquire the data. The data has been stored and displayed in the form of time domain signal. A defect size of 250 micron to 2000 micron width with depth of 100 micron is created on outer and inner ring of the bearings and operated at different speeds ranging from 1000 to 5000rpm and with load varies from of 5kg to 20kg. Sensor has mounted at the maximum position in the load zone that is at the top of bearing. Proper cleaning of bearings was carried out before application of grease to make them free from contaminants, if any. Support bearings are healthy during the entire experimentation and there vibration levels are also measured time to time for confirmation. In experimental approach a focus is on Time domain and frequency domain analysis for defected outer ring and inner ring.

Measurements of vibration amplitudes

© 2015, IERJ All Rights Reserved 

Initially the measurement of vibration amplitudes of healthy (defect free) test bearing is carried out for reference. Afterwards the defective test bearing has been incorporated and amplitudes of vibrations are measured. High frequency range accelerometer of 10 kHz capacity and sensitivity 97.5mV/g is mounted on the test bearing housing. The sampling rate of 25.6 kilo samples per second is considered during the experimentation. For the same speed, load and defect size, the amplitudes of vibrations are confirmed after measuring repeatedly for 3 to 5 times. The percentage error of 0.2 to 0.6 only has been observed in the measurement of amplitude of vibration. The amplitudes of vibrations of test bearings are measured at different speeds, loads and defect sizes on outer ring as well as inner ring of bearings under following different conditions.

i) At constant speed & radial load with variations in defect sizes.

ii) At constant defect size & radial load with variations in speed.

iii) At constant defect size and speed with variations in radial load at test bearing.

In case of outer ring defected bearings, defect is stationary and is always located at maximum position in the load zone. The effort has been carried out in measuring the amplitudes of vibrations of outer ring defected bearings with changing the position of defect in the load zone. As explained earlier, support bearings are healthy for entire experimental work. The efforts have also been carried out by measuring the vibrations of test bearing when support bearings are replaced by defective bearings.

| M.S. | I.S. | O.S. | S.S rpm | 1x rpm | 2x rpm | 3x rpm |
|---|---|---|---|---|---|---|
| 1 | 3/1 | 3 | 1000 | 60.24 | 120.48 | 179.10 |
| 1 | 3/2 | 2 | 1700 | 101.24 | 202.35 | 303.45 |
| 1 | 3/3 | 1 | 2900 | 172.56 | 345.60 | 517.23 |
| 2 | 2/1 | 3 | 1800 | 107.69 | 215.50 | 322.40 |
| 2 | 2/2 | 2 | 2900 | 172.47 | 345.60 | 517.70 |

Fig 4 Schematic diagram of Experimental Test Rig

By using FFT Analyzer we can measure the Ball Pass Frequencies of Outer or Inner race (BPFO/ BPFI). Here are some of the graphs of BPFO for different shaft frequencies.

These graphs are directly taken from the FFT (Fast Fourier Transformer) analyzer.

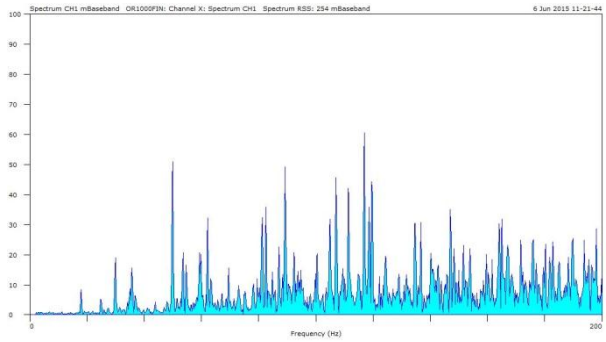

Fig 5 BPFO at 1000 rpm

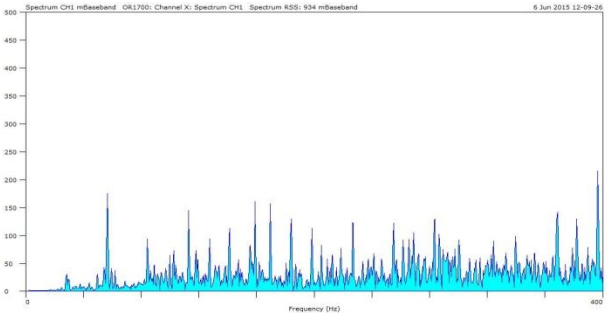

Fig 6 BPFO at 1700 rpm

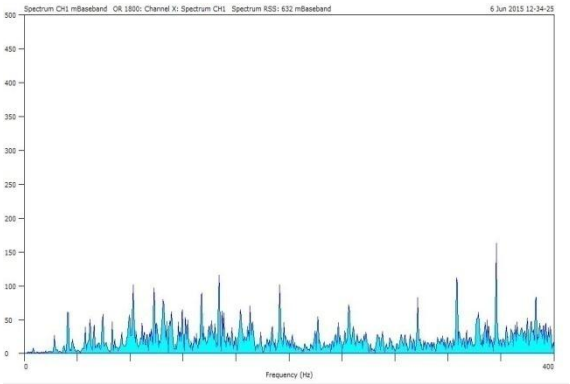

Fig 7 BPFO at 1800 rpm

© 2015, IERJ All Rights Reserved 

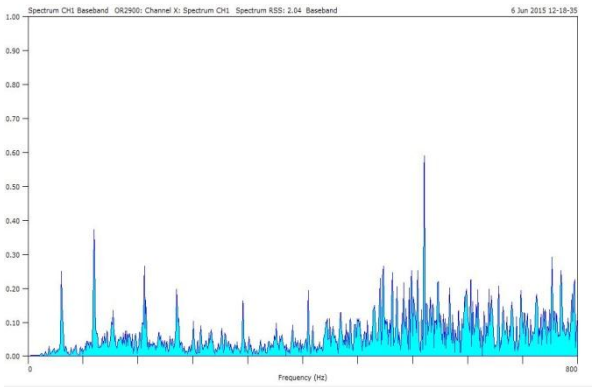

Fig 8 BPFO at 2900 rpm

## VII. RESULTS AND DISCUSSION

The numerical and experimental results at different speeds, loads and defect sizes are plotted and comparison has been made. It is observed that, numerical results obtained by FEM and both are validated successfully by experimental results.

## VIII. EXPERIMENTAL RESULTS

Table no 2 Diff. pulley arrangements for diff. shafts speeds

Where,

M.S. = Motor Shaft
I.S. = Intermediate Shaft
O.S. = Output Shaft
S.S. = Shaft Speed
(1) = Dia. of small groove pulley
(2) = Dia. of medium groove pulley
(3) = Dia. of large groove pulley

| RPM | BPFO | | |
|---|---|---|---|
| | 1x | 2x | 3x |
| 100 | 5.95 | 11.90 | 17.85 |
| 500 | 29.76 | 59.51 | 89.27 |
| 800 | 47.61 | 95.22 | 142.83 |
| 1200 | 71.41 | 142.83 | 214.24 |
| 1500 | 89.27 | 178.53 | 267.80 |
| 2000 | 119.02 | 238.04 | 357.07 |
| 2400 | 142.83 | 285.65 | 428.48 |
| 2800 | 166.63 | 333.26 | 499.89 |

## IX. CONCLUSIONS

From the theoretical, numerical and experimental analysis carried out in the present work, following conclusions are drawn.

1. At constant speed and constant load with different defect sizes on outer ring, amplitudes of vibration varies with increase in defect size. Thus at 1000, 2000, 3000 and 5000 rpm , the amplitudes of vibration are in the range of 10-60 mm/s2 , 40-250 mm/s2 ,100-600 mm/s2 and 224 to 1840 mm/s2 respectively for defect size in the range of 0.25 to 2.0 mm .

Similarly at constant speed and constant load with different defect sizes on inner ring, amplitude of vibration varies with increase in defect size.

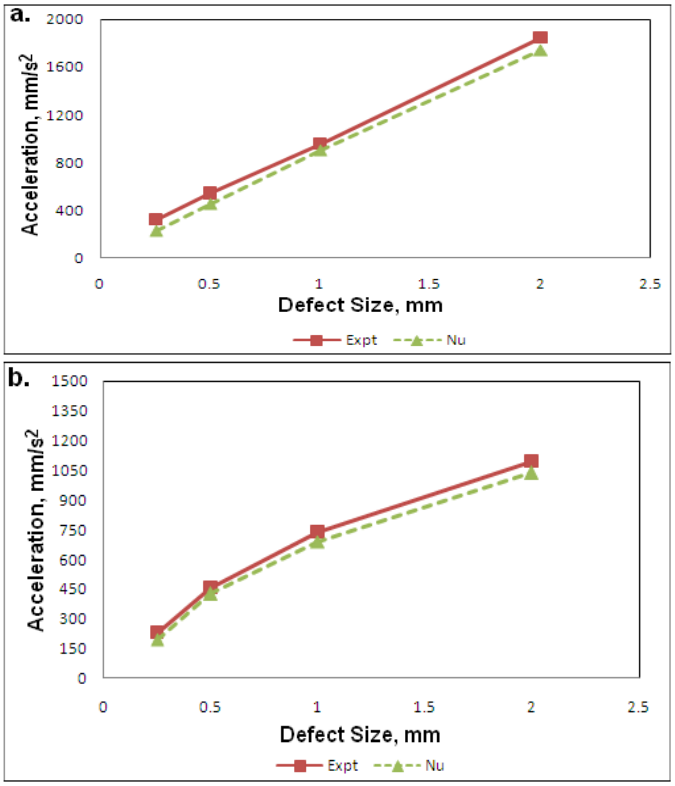


Fig 9 Comparison of Vibration amplitudes at 5000rpm for various defect sizes on a) Outer ring b) Inner ring

Thus at 1000, 2000, 3000 and 5000 rpm, the amplitudes of vibration are in the range of 7-40 mm/s2 , 25-150 mm/s2 ,50-325 mm/s2 and 196 to 1093 mm/s2 respectively for the said range of defect size. Hence it is concluded that, the outer ring defected bearings has higher amplitudes of vibration in comparison with inner ring defected bearings for the same speed.

2. At constant defect size and constant load with different speeds of rotation, amplitudes of vibration varies with increase in speed. In this case also amplitudes of vibration are observed higher for outer ring defected bearings than inner ring defected bearings for same defect size.

3. It is noticed that at constant defect size and constant speed with different radial load, the amplitudes of vibration has negligible variation with increase in load.

Hence it is concluded that the defect on outer ring is more serious than the defect on inner ring. The predicted Model successfully gives the results based on the characteristics defect frequencies. Maximum values of amplitudes are observed at corresponding characteristics defect frequencies (fo in case of outer ring defect and fi in case of inner ring defect). Theoretically obtained defect frequencies showing significant effect in the experimental spectra with minor error of 1Hz to 2Hz. Whereas the error of 3Hz to 4Hz is

© 2015, IERJ All Rights Reserved 

observed in experimental and numerical defect frequencies. This is due to complexity of meshing for bearing elements. For the same defect size, the amplitudes of vibration also are large for outer ring defected bearings than the inner ring defected bearings.

Experimental and numerical results give a good agreement for the defected outer and inner ring bearings. It is also concluded that, for the outer ring the position of defect has significant effect on the peaks. During the experimentation, some non zero amplitudes even outside the load zone are observed which may be due to influence of other source of vibrations in the set up at higher speed. It is also observed that when both the healthy support bearings are replaced with defected bearings, the misalignment in the spectrum is noted. Further it is concluded that the theoretical, numerical and experimental results for 1mm defect size at any speed and load are very close.

## ACKNOWLEDGEMENT

I take this opportunity with great pleasure to express my deep sense of gratitude towards my esteemed guide **Prof. K.H. Munde** & Head Mechanical Engineering Department **Prof. G.E. Kondhalkar** for his valuable guidance and incessant encouragement and co-operation extended to us during this Project work and also thanks to ME Co-coordinator **Prof. D. P. Kamble** for his valuable guidance and encouragement.

We would also like to thank **Dr. S. B. Thakare** (Principal, Anantrao Pawar College of Engineering & Research, Parvati, Pune) for their unflinching help, support and cooperation during the project work. I am also thankful to all the teaching staff and non teaching staff of Anantrao Pawar College of Engineering & Research Parvati, Pune for providing all departmental facilities for this Project Stage-I work and their time to time valuable guidance.

## REFRENCES

[1]Zeki Kiral, Hira Karagulle, “ Vibration analysis of rolling element bearings with various defects under the action of unbalanced force”, Mechanical Systems and Signal Processing 20 (2006) 1967–1991

[2]P. K. Kankar, Satish C. Sharma, S.P. Harsha, “ Fault diagnosis of high speed rolling element bearings due to localized defects using response surface method”, Department of Mechanical and Industrial Engineering, Indian Institute of Technology Roorkee 247-667, India

[3]B. Sreejith, A.K. Verma and A. Srividya, “Fault diagnosis of rolling element bearing using time-domain features and neural networks”, 2008 IEEE Region 10 Colloquium and the Third ICIIS, Kharagpur, INDIA December 8-10. PID 409

[4]M. Akbari. Jami, M.R. Ashory, H. Ghoshchian, A. Bakhshizade, “ Influence of localized defect on rolling element bearing vibrations”, Modal Lab., School of Mechanical Engineering, Semnan University, Semnan, Iran

[5]Dipen S. Shah, Vinod N. Patel, “ A Review of dynamic modeling and fault identifications methods for rolling element bearings”, 2nd International Conference on Innovations in Automation and Mechatronics Engineering, ICIAME2014, Procedia Technology 14 (2014) 447-456

[6]M.S. Patil, Jose Mathew, P. K. Rajendrakumar, Sandeep Desai, “ A therotical model to predict the effect of localized defect on vibrations associated with bearing”, ELSEVIER International Journal of Mechanical Sciences 52 (2010) 1193-1201.

[7]Shyam Patidar, Pradeep Kumar Soni, “ An overview on vibration analysis techniques for the diagnosis of rolling element bearing faults”, International Journal of Engineering trends and technology (IJETT)-volume4Issue5-May2013.

[8]Manish yadav, Dr. Sulochana wadhwani, “Vibration analysis of bearing for fault detection using time domain features and neural network”, Department of Electrical Engineering, Madhav Institute of Technology and Science Gwalior, India.

[9]Vibration Signature analysis of defective deep groove ball bearings by Numerical and Experimental approach. Abhay Utpat

© 2015, IERJ All Rights Reserved 